NAME: …… INDEX NO: ……

SCHOOL: …… DATE : ……..

CANDIDATE'S SIGNATURE:……

233/2
CHEMISTRY
PAPER 2
THEORY
JULY / AUGUST 2014
TIME: 2 HOURS

KURIA EAST SUB-COUNTY JOINT EXAMINATIONS COUNCIL 2014

Kenya Certificate of Secondary Education (K.C.S.E.)
CHEMISTRY
PAPER 2
TIME: 2 HOURS

INSTRUCTIONS TO CANDIDATES

- Write your **Name, Index Number** and **School** in the spaces provided above.
- **Sign** and write the **Date of Examination** in the spaces provided above.
- Answer **all** the questions in the spaces provided.
- **ALL** workings **MUST** be clearly shown where necessary.
- Non-programmable silent electronic calculators and KNEC Mathematical tables **may be** used.
- Candidates should check the question paper to ascertain that all the pages are printed as indicated and that no questions are missing.

FOR EXAMINER'S USE ONLY

QUESTIONS	MAX SCORE	CANDIDATE'S SCORE
1	13	
2	12	
3	11	
4	14	
5	09	
6	11	
7	10	
TOTAL	**80**	

1. Use the following electrode potentials to answer the questions that follow:

$Zn^{2+}_{(aq)} + 2e^- \longrightarrow Zn_{(s)}$ $E^\theta = -0.76V$

$Pb^{2+}_{(aq)} + 2e^- \longrightarrow Pb_{(s)}$ $E^\theta = -0.13V$

$Ag^+ + e^- \longrightarrow Ag_{(s)}$ $E^\theta = +0.8V$

$Cu^{2+} + 2e^- \longrightarrow Cu_{(s)}$ $E^\theta = +0.34V$

(a) From the list above, identify:

(i) the strongest oxidising agent. (1mk)

(ii) the strongest reducing agent. (1mk)

(b) A cell using zinc and lead was set up as shown below.

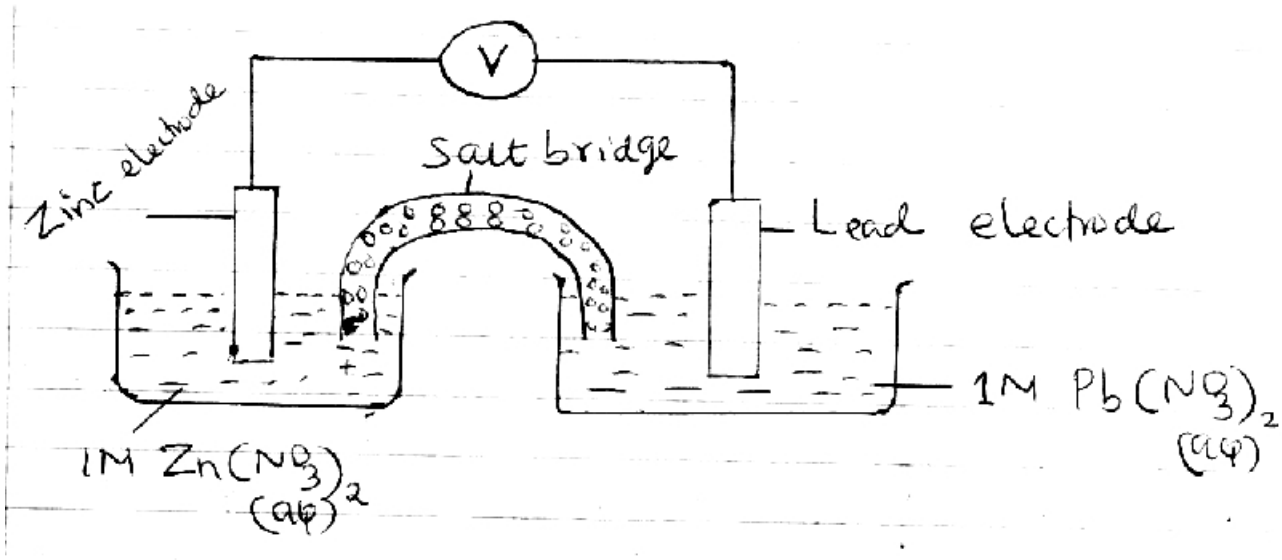

(i) Write the equation for the cell reaction. (1mk)

(ii) Calculate E^θ for the cell. (2mks)

(iii) What is a suitable salt bridge for this cell? (1mk)

(iv) Explain how the salt bridge helps to maintain the charge balance in each half-cell as the reaction continues. (2mks)

(c) (i) Using a well labelled diagram, explain how a copper spoon can be electroplated with silver. (2mks)

(ii) Calculate the amount in grammes of silver that would be deposited on the spoon in two hours using a current of 0.03 amperes. (Charge of 1 mole of electrons = 96,500 coulombs) (Ag = 108). (2mks)

(d) Select **two** elements from the list in (i) above that would make a cell with the minimum electromotive force. (1mk)

2. The grid below is part of the periodic table. The symbols used are not the actual symbols of the elements. Study it and answer the questions that follow.

							A
B			G			E	
		L					C
D							
Y						F	

(i) What name is given to the family to which elements A and C belong? (1mk)

(ii) Write the chemical formula of sulphate of L. (1mk)

(iii) The ionic radius of element E is bigger than its atomic radius. Explain. (2mks)

(iv) The oxide of G has lower melting point that oxide L. Explain. (2mks)

(v) Among element B, G and E, which one has the highest 1st ionization energy. Explain. (2mks)

(vi) Which letter from the table represents:

(a) The strongest oxidising agent. (1mk)

(b) The strongest reducing agent. (1mk)

(vii) State and explain **one** commercial use of element C. (2mks)

3. The scheme below shows several reactions starting with propanol. Study it and answer the questions that follow.

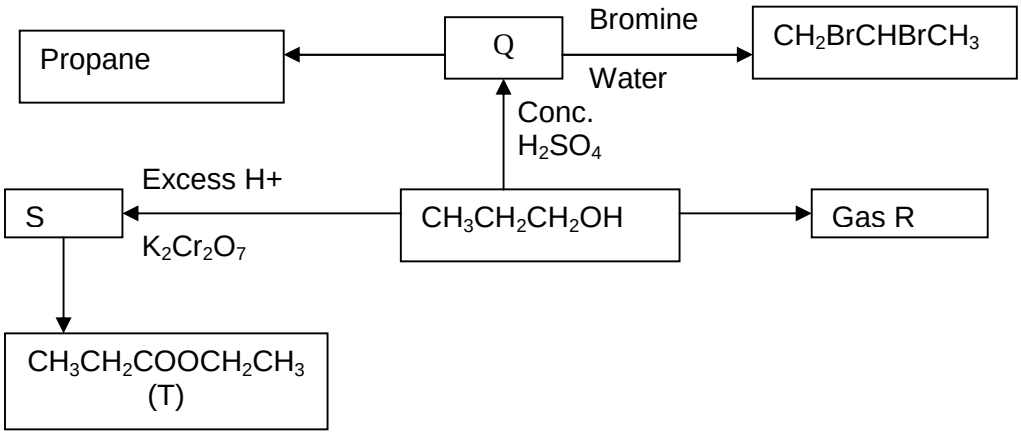

(a)

(i) Name gas R. (1mk)

(ii) Name and draw the structural formula of compound Q. (2mks)

(iii) What conditions and reagents are necessary to convert S to T? (2mks)

Reagent:

Condition:

(iv) Write an equation for the reaction that takes place when one mole of chlorine gas react with propane. (1mk)

(b) The table below shows some properties of the organic compounds U, V and W. Use the information to answer the questions that follow.

	U	V	W
Reaction with liquid bromine	Decolourize bromine very fast.	No reaction.	Decolourise bromine slowly.
Combustion.	Burns with yellow smoky flame.	Burns with a blue flame leaving no residue.	Burns with a clear yellow flame.
Reaction with concentrated sulphuric acid.	No reaction.	It is dehydrated to form compound W.	No reaction.

(i) To which homologous series do the following compounds belong? (3mks)

U -

V -

W –

(ii) Name **two** uses of compound V. (2mks)

4. In the preparation of carbon (iv) oxide in the laboratory, dilute hydrochloric acid was added to marble chips ($CaCO_3$) as shown in the diagram below.

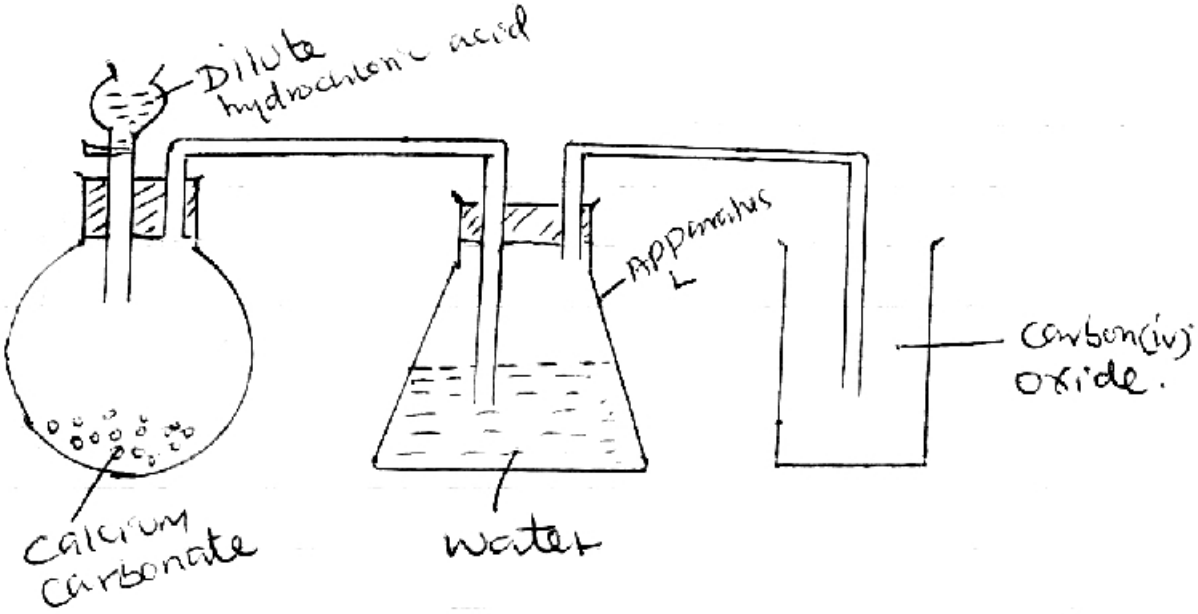

(a) (i) What observations are made when the acid is added to the marble chips? (2mks)

(ii) Why is dilute hydrochloric acid preferred to dilute sulphuric (vi) acid in the above reaction? (2mks)

(iii) Why was the gas passed through water in the apparatus L? (1mk)

(iv) Write an ionic equation for the reaction which occurs in the flask. (1mk)

(v) Explain why calcium hydroxide is used to detect presence of carbon (iv) oxide while sodium hydroxide is not used. (1mk)

(b) Study the diagram below that shows some reactions of dry air then answer the questions that follow.

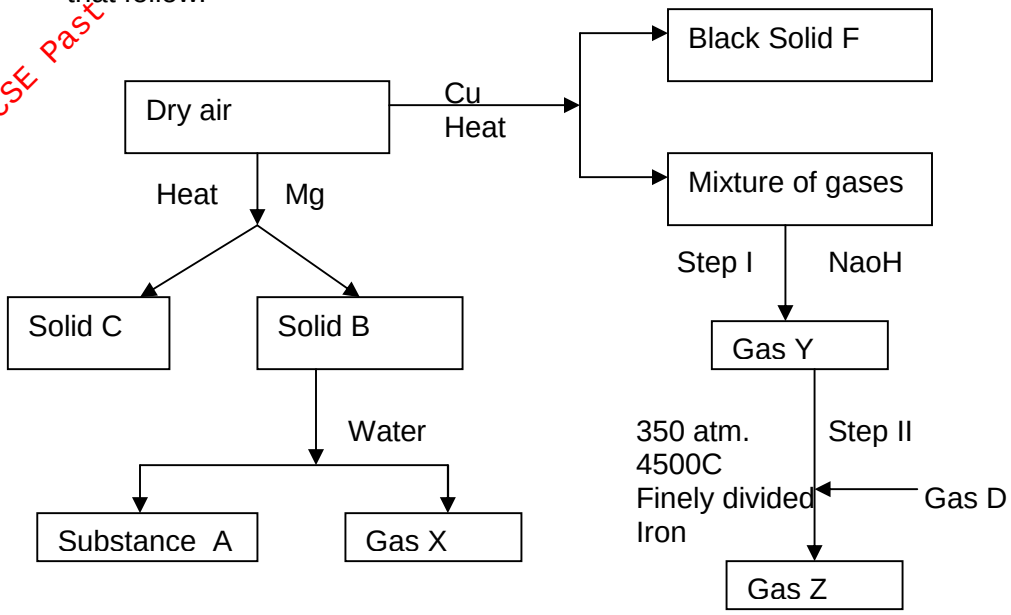

(i) Identify:
Solid B (1mk)

Gas D (1mk)

Gas Z (1mk)

(ii) Why is the amount of solid B obtained much less than solid A? (1mk)

(iii) Write a balanced equation for the reaction between solid B and water. (1mk)

(iv) How can gas Y be obtained from gas X in the laboratory? (2mks)

5. The diagram below shows the effect of heat on hydrated copper (II) sulphate.

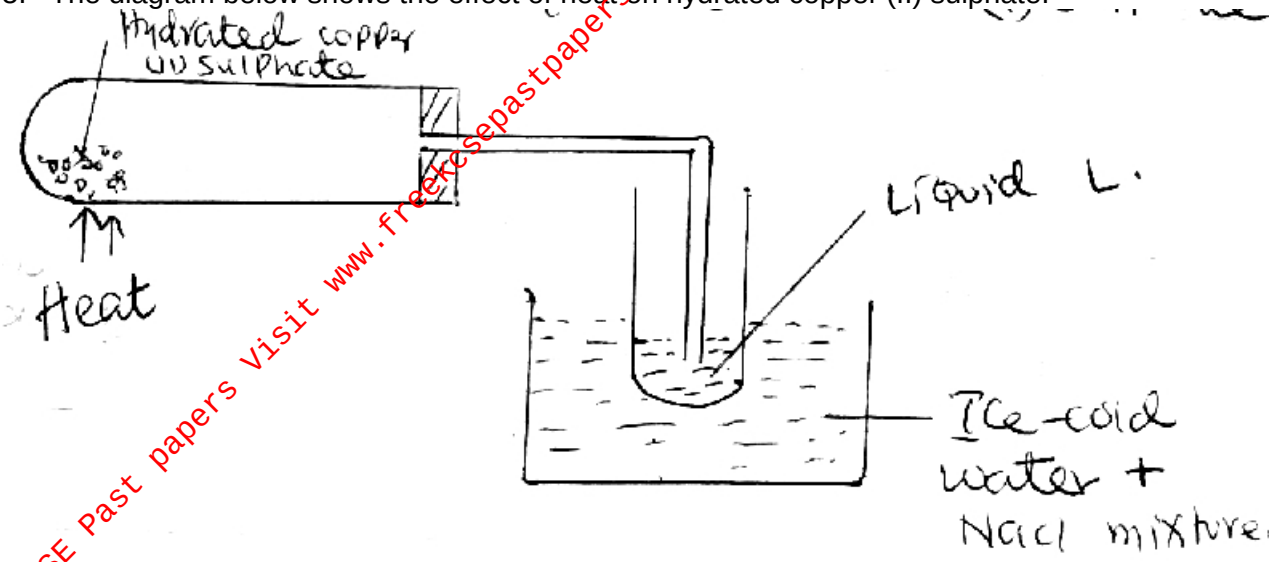

(a) What is the colour of hydrated copper (ii) sulphate? (1mk)

(b) What is the colour of anhydrous copper (ii) sulphate? (1mk)

(c) What is the use of cold water? (1mk)

(d) What is the use of sodium chloride in cold water? (2mks)

(e) Name liquid L. (1mk)

(f) How can you confirm that liquid L is pure? (1mk)

(g) State what will be observed if the residue in the test tube is cooled and a few drops of water added. (2mks)

6. The following is a flowchart that shows the industrial preparation of nitric (v) acid.

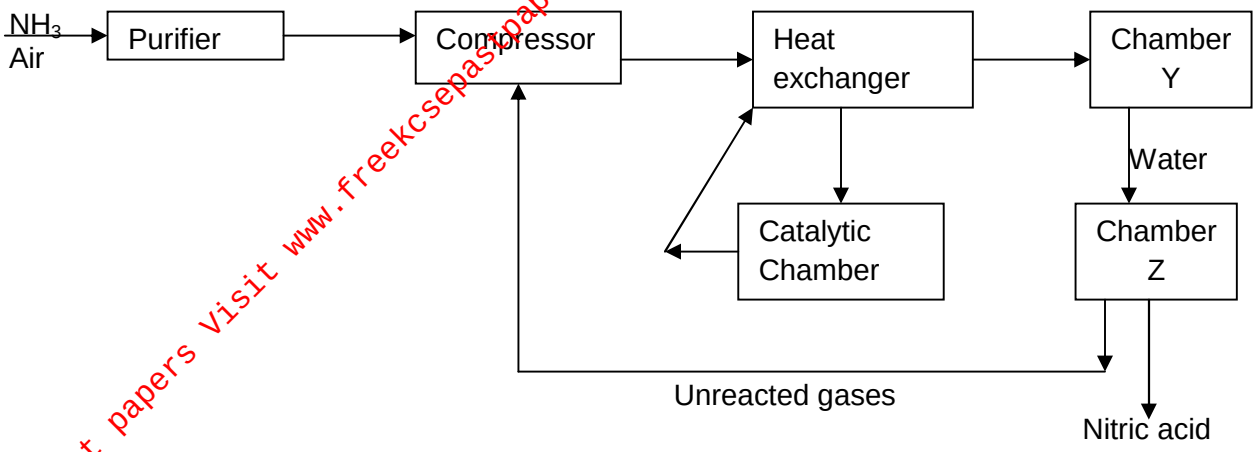

(a) What happens in the heat exchanger? (1mk)

(b) Write an equation for the reaction that takes place in the catalytic chamber and name the catalyst. (2mks)

(c) What happens in chamber Y? (2mks)

(d) How is the required temperature in the process maintained? (2mks)

(e) Write an equation for the overall reaction that takes place in chamber Z. (1mk)

(f) The final product from the process contains 65% of nitric acid. How is the concentration of nitric (v) acid increased/ (1mk)

(g) It is important to purify the gases before reacting them. Give a reason. (1mk)

(h) Identify **one** impurity which is eliminated in the purifier. (1mk)

7. The diagram below shows a flow diagram for the industrial manufacture of hydrogen chloride solution.

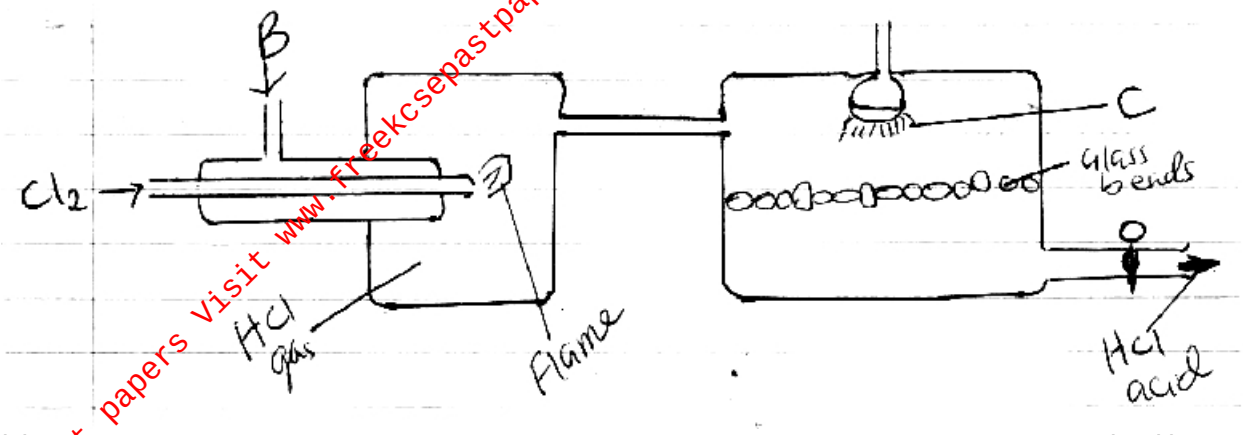

(a) Name reagent B. (1mk)

(b) Identify **two** main sources of raw material B. (2mks)

(c) What is the main source of chlorine gas? (1mk)

(d) Identify substance C and give its role. (2mks)

(e) What is the role of glass beads in the reaction? (2mks)

(f) Write equations for the reaction when:-

(i) Substance B react with chlorine gas. (1mk)

(ii) Hydrogen chloride gas is absorbed by substance C. (1mk)