NAME: …….... CLASS:…….. ADM. NO……

MATHEMATICS
Paper 1
Time: 2 ¼ hours

M O K A S A J O I N T E V A L U A T I O N E X A M I N A T I O N

MARCH/APRIL 2013

Kenya Certificate of Secondary Education

MATHEMATICS

PAPER 1

INSTRUCTIONS TO STUDENTS

1. *Write your name, admission number and class at the top of this paper.*
2. *The paper contains 2 sections; Section **A** and Section **B**.*
3. *Answer **ALL** the questions in the spaces provided.*
4. *Non-Programmable silent electronic calculators and KNEC mathematical tables may be used where necessary.*

For Examiner's Use Only
SECTION A

1	2	3	4	5	6	7	8	9	10	11	12	13	14	15	16	**TOTAL**

SECTION B

17	18	19	20	21	22	23	24	**TOTAL**

GRAND TOTAL

1. Without using a calculator evaluate **(3 marks)**

$$\frac{-2(5+3)-9\div3+5}{-3 \times -5+-2 \times 4}$$

2. A line which passes through points P(4,a) and Q(2a,2) is parallel to the line whose equation is 2y-3x=6. Find the value of *a*. **(3marks)**

3. Evaluate $5\frac{1}{2}-1\frac{1}{7}\left(1\frac{1}{5}+\frac{9}{10}\right)+\frac{1}{3}$ of $\left(\frac{2}{3}\div\frac{5}{6}\right)$ **(3marks)**

4. Find the value of x in the equation **(4 marks)**

$$\frac{243 \times 3^{2x}}{729 \times 3^{x} \div 3^{(2x-1)}} = 81$$

5. Winnie bought maize and millet flour from a vendor. She then mixed them in the ratio 4:3. She bought the maize flour at kshs.41 per kg and the millet flour at kshs.61 per kg. If she was to sell and make a profit of 20%. What should be the selling price of 1kg of the mixture? Give you answer correct to the nearest 10cent. **(3marks)**

6. A Kenyan tourist left Germany for Kenya through Switzerland. While in Switzerland he bought a watch worth 52 Deutche marks. Find the value of the watch in Kenya shillings using the exchange rates below, **1 swiss Franc = 1.28 DM and 1 Swiss Franc = 45.21 Kenya shillings.** **(3 marks)**

7. Use table of reciprocals only to work out

$$\frac{3}{0.6735} + \frac{13}{0.156}$$ **(3 marks)**

8. (a) Find the LCM of (x-1), (x^2-1) and x^2+2x+1. **(1 mark)**

(b) Hence or otherwise simplify **(2 marks)**

$$\frac{1}{x-1} + \frac{x-1}{(x^2+2x+1)}$$

9. Given the matrix $M = \begin{pmatrix} 3 & -5 \\ 5 & 2 \end{pmatrix}$ find the inverse of M and hence

Solve the simultaneous equations **(4 marks)**

$3x - 5y = -9$
$5x + 2y = 16$

10. Find the integral values of x for which,

(3 marks)

$$\frac{3(4-2x)}{2} < 9 \geq 4x - 3$$

11. A piece of land was valued at kshs.680,000 at the beginning of January 2009. Due to increase in demand, the land appreciated at a rate of 25% annually. Calculate the value of the land at the end of December, 2012 to the nearest whole number. **(3 marks)**

12. Solve for x in the equation.

$\log_3(2a+8) - \log_3 a = 1 + \log_3 2$ **(3 marks)**

13. A box contains 10 bolts. It is found that 4 of them are sub standard. If two bolts are taken from the box at random, what is the probability that both are substandard? **(2 marks)**

14. A point P (-2, 5) is mapped onto P'(1, 9) by a translation T_1. If P' is mapped onto P" by a translation T_2 given by $\begin{pmatrix} -4 \\ -1 \end{pmatrix}$. Find the coordinates of P" and hence a single transformation which maps P' to P". **(3 marks)**

15. The net of a solid is shown below.

(a) Sketch the solid if ABCD is the base. **(1 marks)**

(b) Calculate the angle that the plant height makes with the base. **(2 marks)**

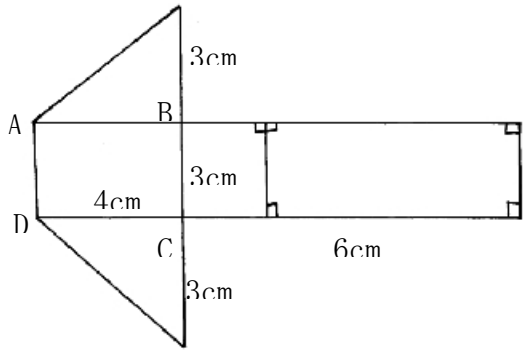

16. The table below shows the masses in Kg of some goods kept at a factory ware-house

Mass Kg	60-79	80-99	100-119	120-139	140-159	160-179
Frequency	2	6	10	12	6	4

Calculate Median Mass **(4 marks)**

SECTION B

17. Using a ruler and pair of compass only.

(a) Construct on the space provided a triangle ABC with AB=5cm, BC=6cm and AC=7cm. Construct the circumcircle of the triangle and measure its radius OB. **(4 marks)**

(b) At B, construct the tangent YBX with X on the same side of the radius OB as C. Determine by construction the point P on the circumstance such that the angles XBC=BPC ad BP=BC. Measure PC. **(6 marks)**

18. (a) Sketch the graph of $y = x^2 + 5$ **(2 marks)**

(i) Using the mid-ordinate rule, with six strips, estimate the area enclosed by the curve, x axis, y axis and line $x = 3$. **(4 marks)**

(ii) Calculate the same area by integration. **(2 marks)**

(b) Calculate the percentage error made when the two methods above are used.

(2 marks)

19. An aircraft leaves A (60^0N, 13^0 W) at 1300h and arrives at B (60^0 N, 47^0E) at 1700h

(a) calculate the average speed of the aircraft in Knots **(3 marks)**

(b) Town C (60^0 N, 133^0 W) has a helipad . Two helicopters S &T leave B at the same time. S moves due West to C while T moves due North to C. if the two helicopters are moving at 600 knots.

Find the time taken by

(i) S **(2 marks)**

(ii) T to reach C **(2 marks)**

(b) The local time at a town D (23^0 N, 5^0 W) is 1000h. What is the local time at B. **(3marks)**

20. (a) Complete the table below, giving the values correct to 2 decimal places. **(2 marks)**

x^0	0	20	40	60	80	100	120	140	160	180
Cos x	1.00	0.94	0.77	0.50		-0.17		-0.77		-1.00
Sin x + cos x	1.00	1.28		1.37	1.15		0.37		-0.60	-1.00

(b) On the grid provided and using the same axes draw the graph of y=cos x and y=sin x + cos x for $0^0 \leq x \leq 180^0$. Use scale 1cm to represent 20^0 on the x axis and 4cm to represent 1 unit on the y axis. **(4 marks)**

(c) Use the graph to solve the equation.

(i) sin x + cos x = 1.2 **(2 marks)**

(ii) Cos x = sin x + cos x **(2 marks)**

21. A school bus left Nairobi at 9:00am and traveled towards Eldoret at an average speed of 80km/hr. At 9.30a.m a car left Eldoret towards Nairobi at an average speed of 120km/h. Given that the distance between Nairobi and Eldoret is 400km. Calculate

(a) the time the car arrived in Nairobi **(2 marks)**

(b) the time the two vehicles met **(4 marks)**

(c) the distance from Nairobi to the meeting point **(2 marks)**

(d) the distance of the bus from Eldoret when the car arrived in Nairobi **(2 marks)**

22. In the circle below, O is the centre; AB and AD are tangents to the circle. Angle ABC = 30^0, angle ADC = 40^0 and Angle DOB = 140^0

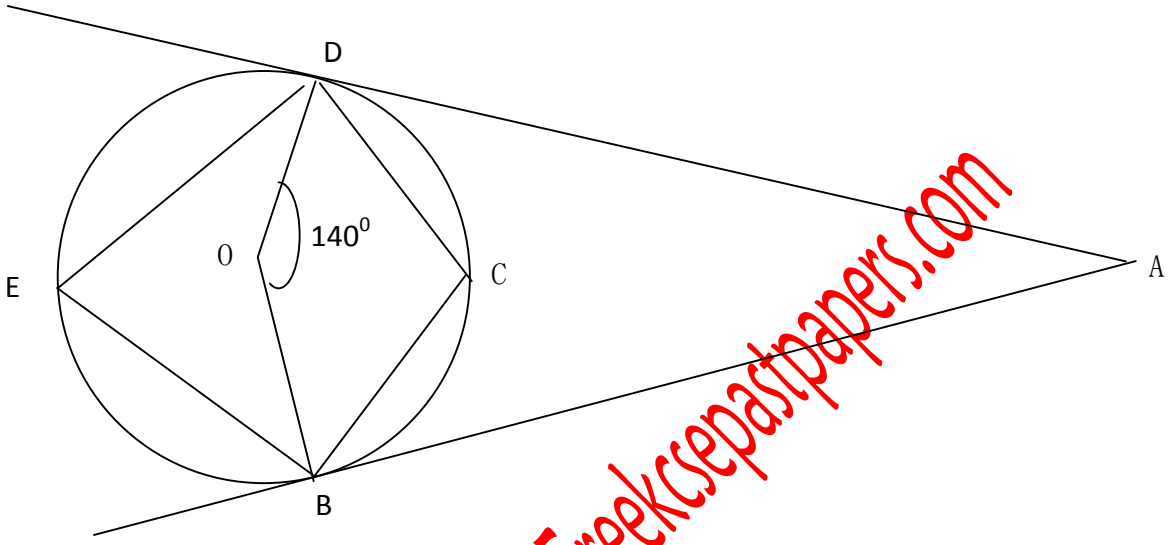

Find: Giving reasons:

(a) Angle DEB **(2 marks)**

(b) Angle DAB **(2 marks)**

(c) Angle ODB **(2 marks)**

(d) Reflex Angle DOB **(2 marks)**

(e) Angle DBC **(2 marks)**

23. Four towns P, Q, R and S are such that town Q is 120km due East of town P. Town R is 160km due north of town Q, town S is on a bearing of 330^0 from Q and on a bearing of 300^0 from R.

(a) Using a ruler and pair of compass only, show the relative positions of towns P, Q, R and S. Take a scale of 1cm to rep 50km. **(5 marks)**

(b) Use the drawing to determine,

(i) The distance SP in km. **(2 marks)**

(ii) The bearing of S from Q. **(1 mark)**

(iii) How far north, S is, from lie QP produced. **(2 marks)**

24. The two variable P and Q are connected by $Q=Ka^p$ and the table of values of P and Q is given below.

P	0	1	2	3	4	5	6	7	8
Q	600	606	612	618	624	631	637	643	650

(a) Write the equation $Q=Ka^p$ in the form y = mx + c. **(1 mark)**

(b) Draw a suitable linear graph and use it to estimate the values of K and a. **(8 mks)**

(c) Write the equation connecting P and Q. **(1 mark)**

ATTACH A GRAPH PAPERS (22 ROWS)